CANFI: Cheap Automatic Noise Figure Indicator

Frank Schmäling
DL2ALF

Wolf-Henning Rech
DF9IC

Alexander Kurpiers
DL8AAU

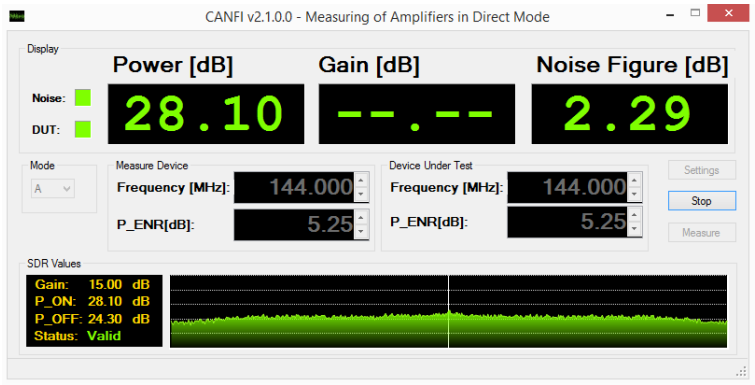

What is a noise figure meter?

- Noise figure is defined by source ENR and a measured power ratio:

$$F = ENR / (Y-1) \quad \text{while} \quad Y = P_{ON} / P_{OFF}$$

- Noise figure meter = relative power meter
  + calibrated noise source + calculator
- Requirements for the power meter:
  - precise ratio measurement (< 0.1 dB)
  - frequeny selective with adjustable center frequency and wide bandwidth (> 1 MHz)

Why a DVB-T USB stick?

PROs:

- Cheap
- ADC has inherently better linearity than analogue detectors
- Higher sampling rate than audio ADC based SDRs
- Wide range tuner covers most VHF / UHF frequencies

CONs:

- 8 bit resolution limits dynamic range
- Some birdies
- Thermal drift

Inside the DVB-T USB stick

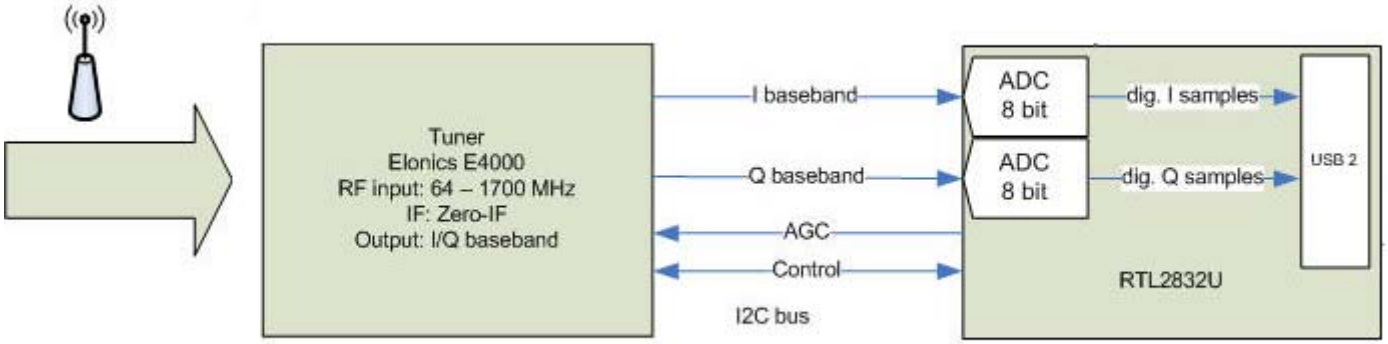

- Tuner: E4000, FC001x, R820T, …
- Baseband: RTL2832U
  - 8 Bit ADCs for I and Q, 2 MS/s
  - USB 2 Interface

Inside the DVB-T USB stick

- Tuner IC determines:
  - Frequency range
  - Gain control stages
  - Noise figure
  - Dynamic range
- We use Elonics E4000:
  - Includes 1296 MHz
  - Data sheet with detailed information available

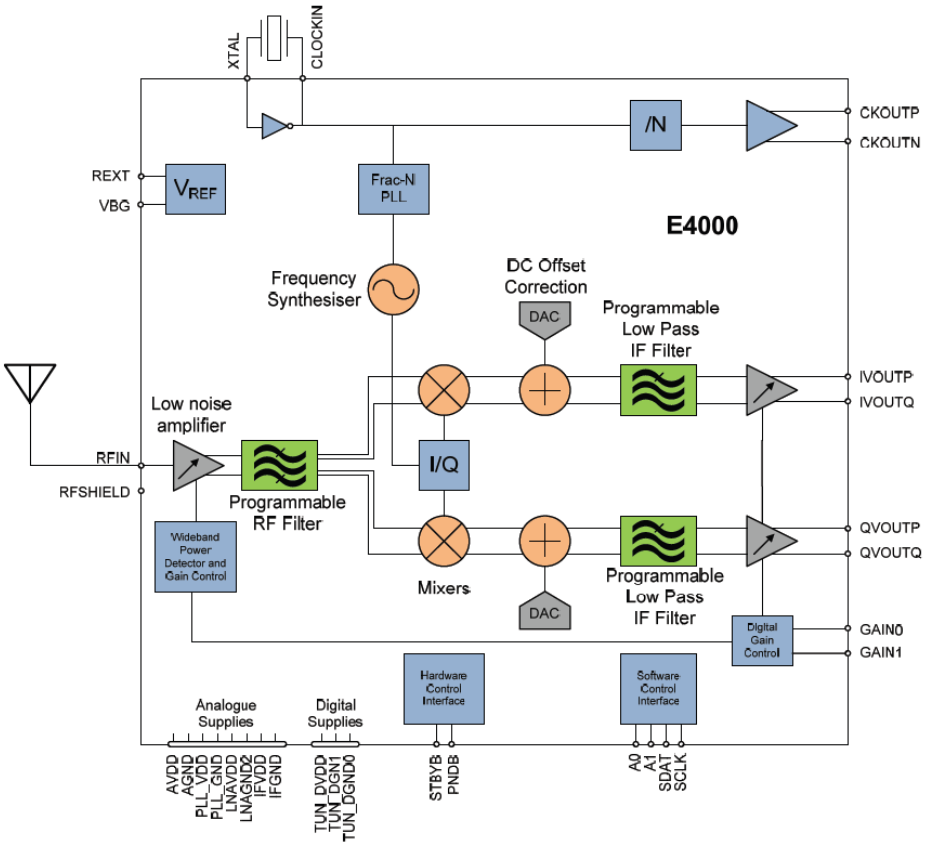

E4000 signal path and gain control

- 8 stages with switchable gain
- No AGC allowed for CANFI
- MGC scheme is part of *rtlsdr.dll* and must be modified
- CANFI needs less headroom than typical SDR application

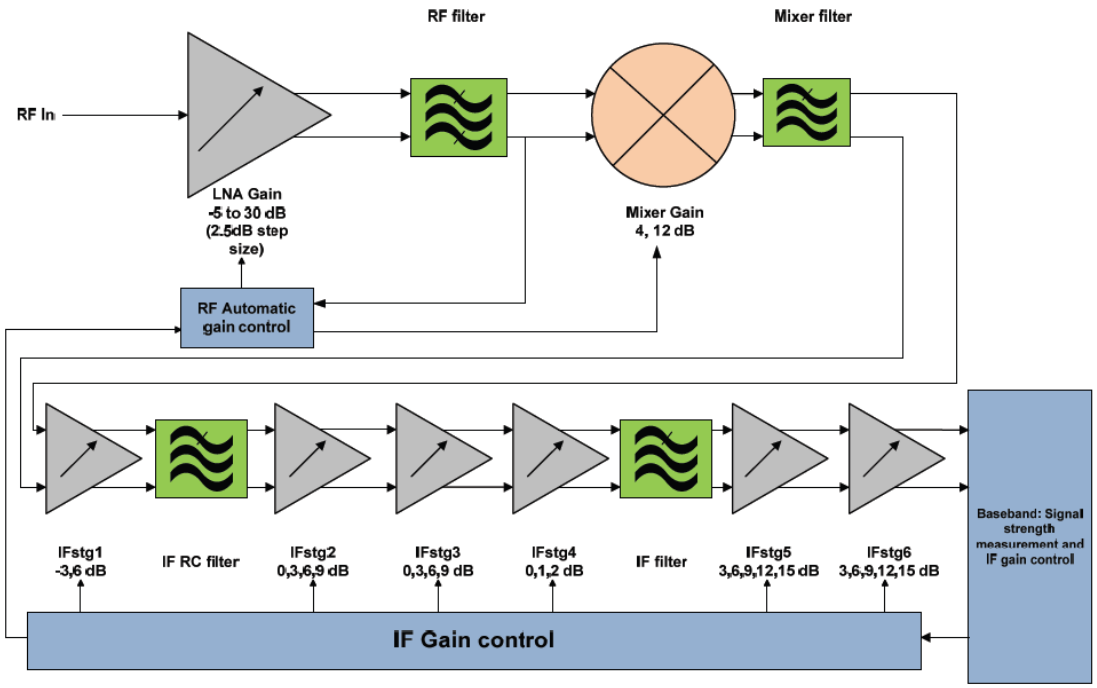

ADC linearity measurement

- Test of tuner / ADC linearity
- Signal source:
  - amplified Gaussian noise (Zener diode and 3 stage amp)
  - followed by a step attenuator (10 dB + 0…39 dB + 10 dB)
- Attenuator assembly calibrated and tested with three different VNAs
- Test program reads I and Q samples, corrects DC offset, calculates power and averages over a selectable sample size
- Tuner / ADC noise with no input measured separately and subtracted from total noise power

ADC linearity measurement: result

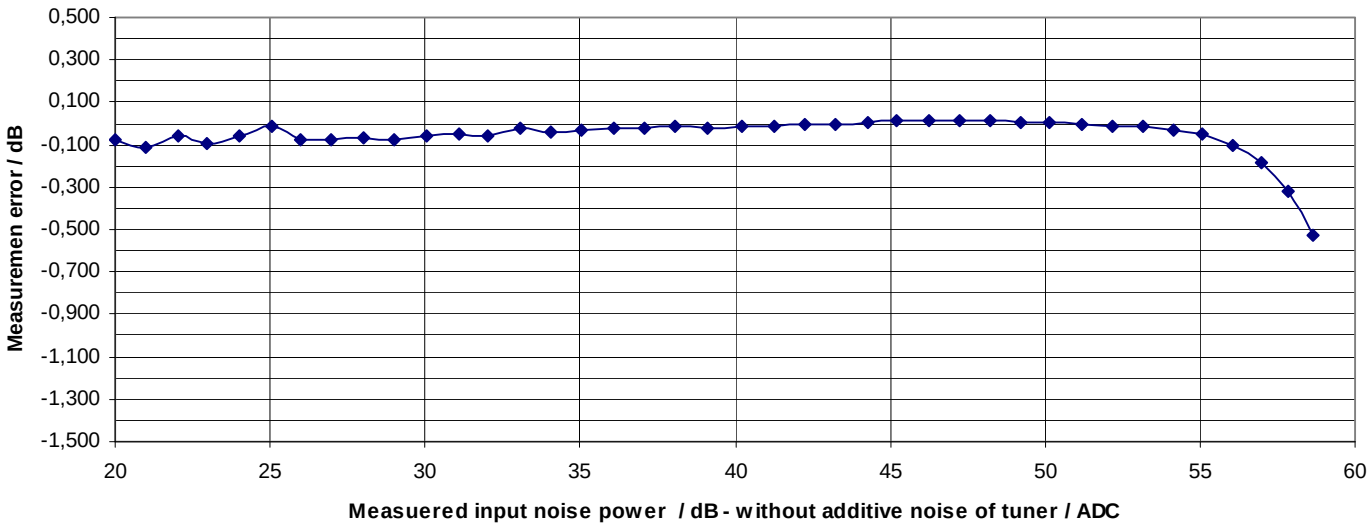

- <0.1 dB error over any 15 dB ratio between 25 and 55 dB relative input signal power
- Remaining error partly due to thermal drift during measurement
- Clipping at levels >55 dB

Clipped level error correction

- Clipping events are counted separately and could be used in future for a correction to extend the dynamic range (not yet implemented)

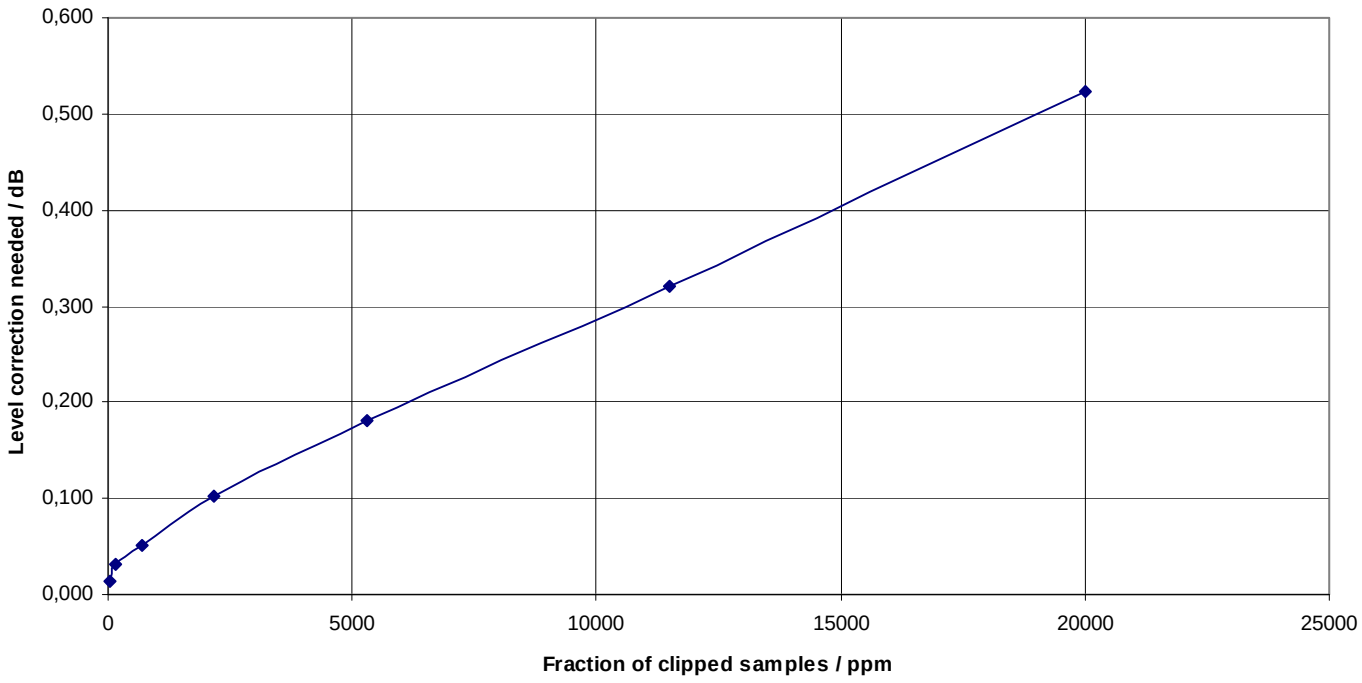

Additional Hardware

- Preamp for lower noise figure (DVB-T stick has about 10 dB) and better input match
- Switchable 28 V supply for noise source

- USB hub for single connection and power supply
- Built-in USB memory stick with software and calibration data

MGA30889 preamp

- MMIC in SOT89 case
- 15dB flat gain between 0.04 - 2 GHZ
- Internally matched
- NF ca. 2dB
- 5 V power supply (must be stabilized)

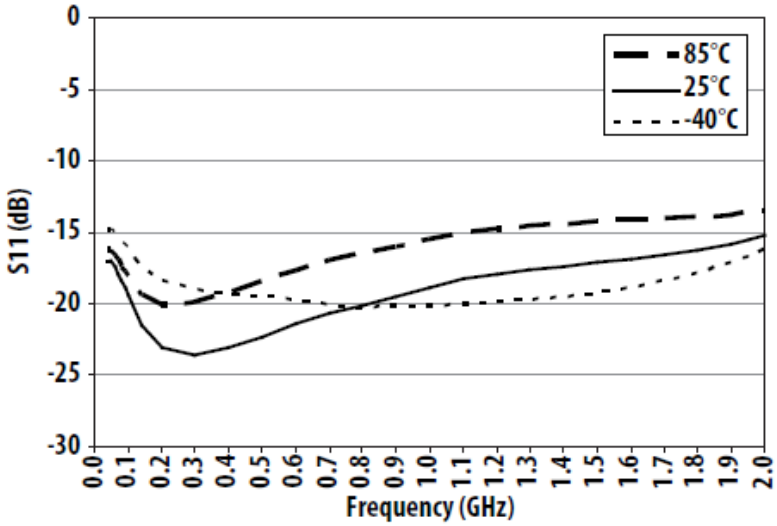

- But: stability problems

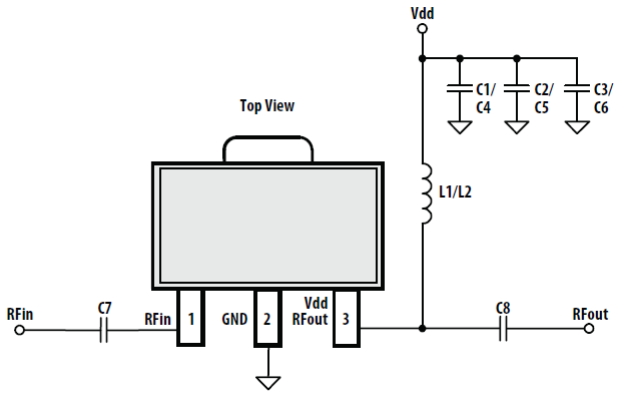

Terratec Cinergy RC + MGA30889

- Upper side:
  - DVB-T board
  - Case and input connector removed

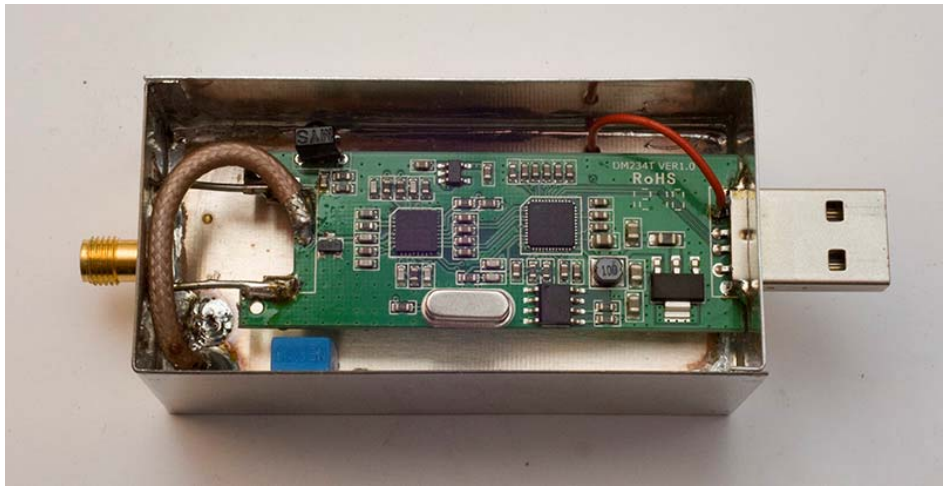

- Lower side:
  - 5 V boost voltage converter
  - Preamp with MGA 30889

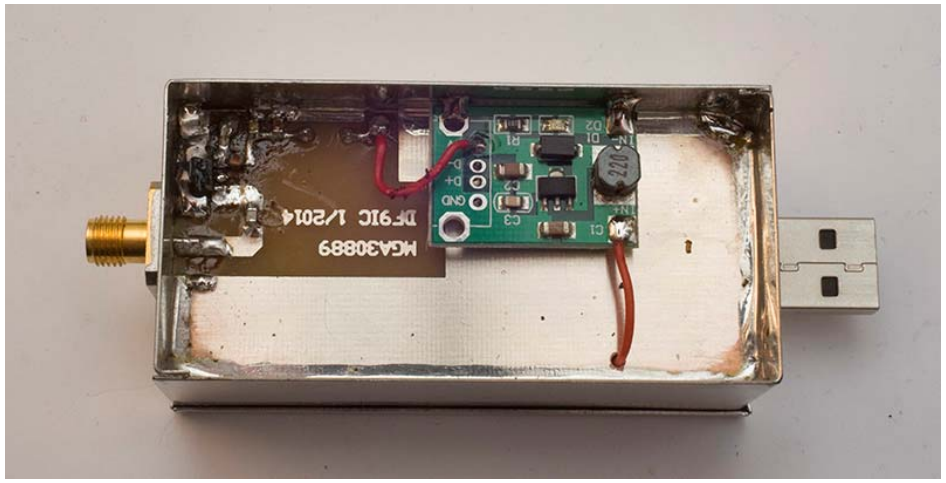

SER2USB and 28 V boost converter

- Upper side:
  - SER2USB board
  - Case and Sub-D9 connector removed
  - USB power + RTS

- Lower side:
  - LM2733 boost converter
  - Output filter
  - MOSFET switch BTS462 32 V, 100 mOhm, SMT

CANFI Hardware

- Complete HW in a box
- USB powered (additional external supply recommended)
- Includes SW on a USB memory stick

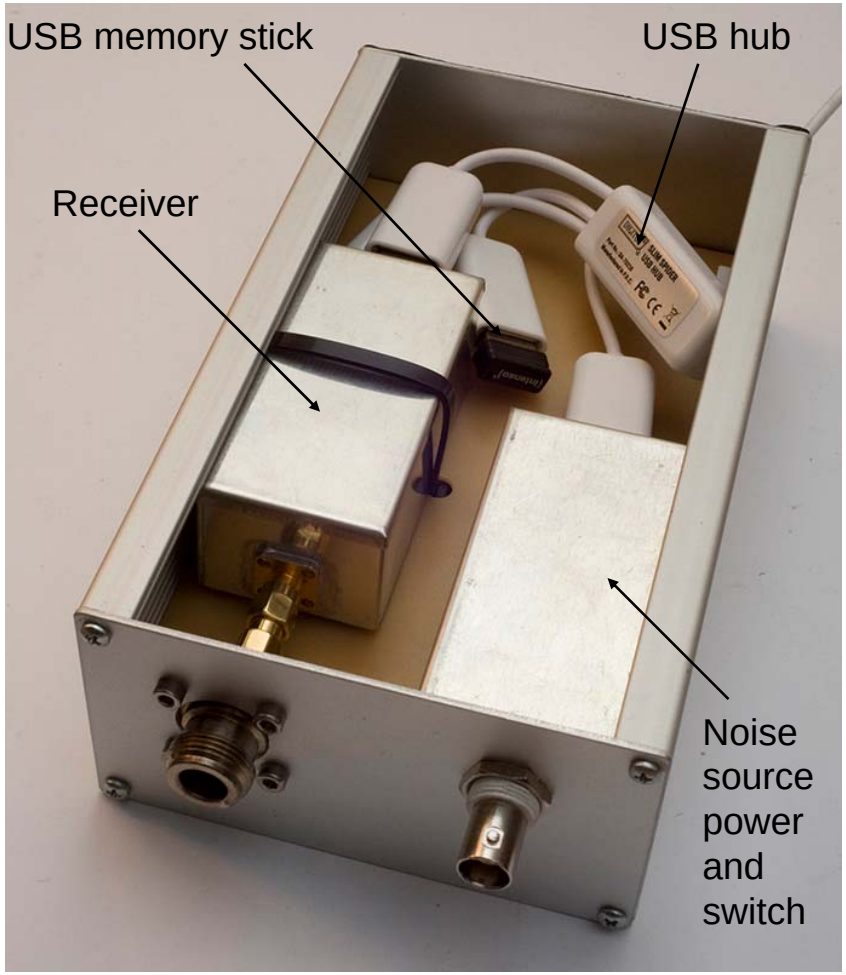

Software

- Measurement engine and GUI by Frank DL2ALF
- Developed in C# for WinXP - Win8 OS
- Status: alpha release
- Can be ported to Linux for a possible embedded noise figure meter on RasPi / BeagleBone / …

- Early test software, modified DLL and Linux ports by Alex DL8AAU

- Theoretical background by Henning DF9IC

Software functionality

- Calibration: measures P_{ON} and P_{OFF} with noise source connected to the test set for each of 11 gain steps in a 50 dB gain range; single frequency calibration only
- Measurement: measures P_{ON} and P_{OFF} with noise source connected to the DUT and calculates noise figure and gain
- Selectable averaging and sample rate (bandwidth)
- Administration and interpolation of ENR tables
- Real time spectrum shows interference problems

Measurement & calibration types

- Preamp for 60-1700 MHz:
  - Preamp noise figure and gain
  - Direct measurement and calibration
- Frequency converter from any frequency to 60-1700 MHz:
  - Converter noise figure and conversion gain
  - Direct measurement and calibration
- Preamp for frequencies >1700 MHz:
  - Preamp noise figure and gain
  - Measurement and calibration through external frequency converter
- DUT input frequency and DUT or converter output frequency must be specified

CANFI demonstration

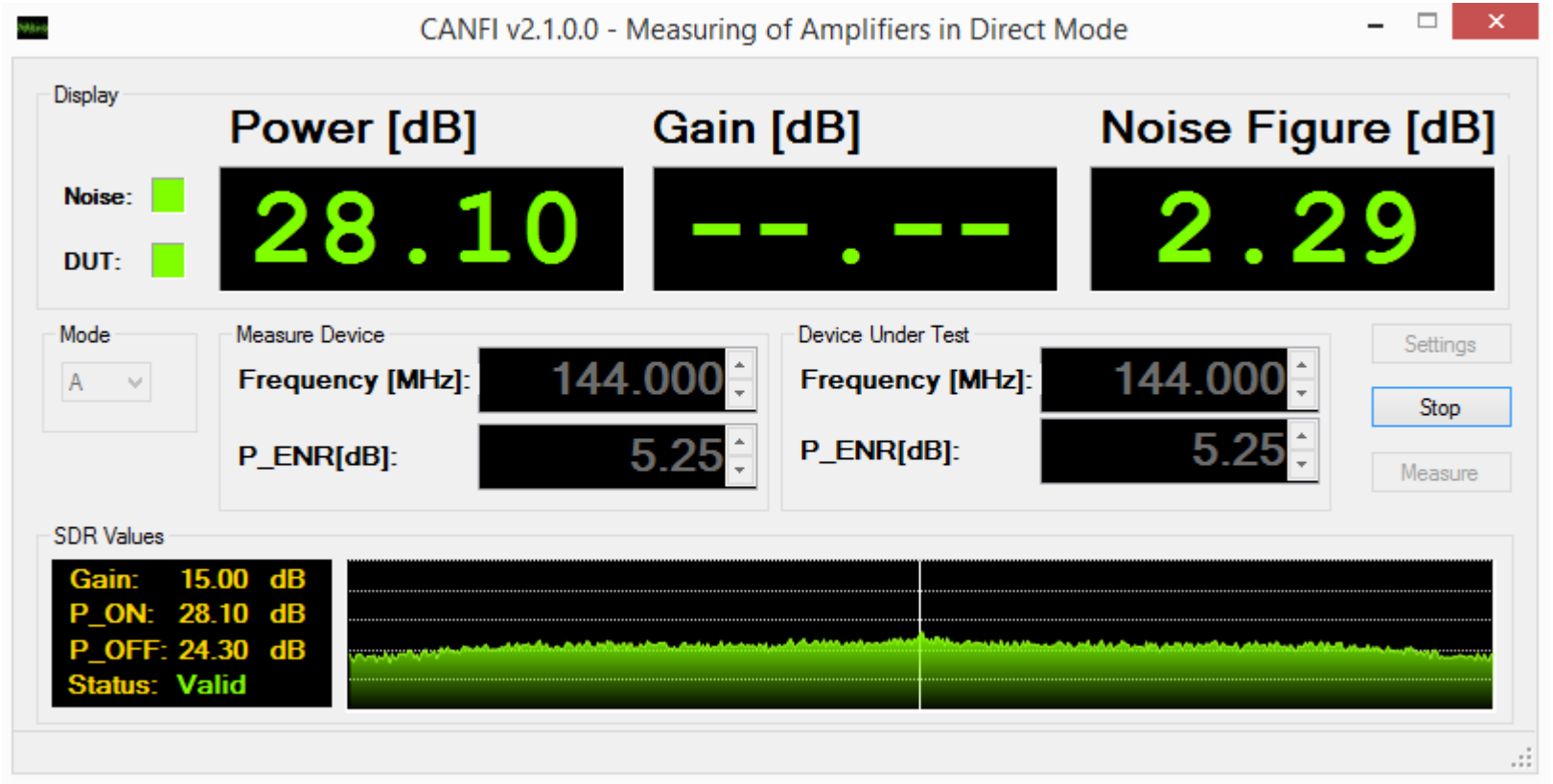

Next steps

- More tests and comparision to professional test sets
- Revision of preamp and 28 V converter boards
- GUI fine tuning

- Release of beta version of the software:
  1st half of 2014

Cheap noise source for CANFI?

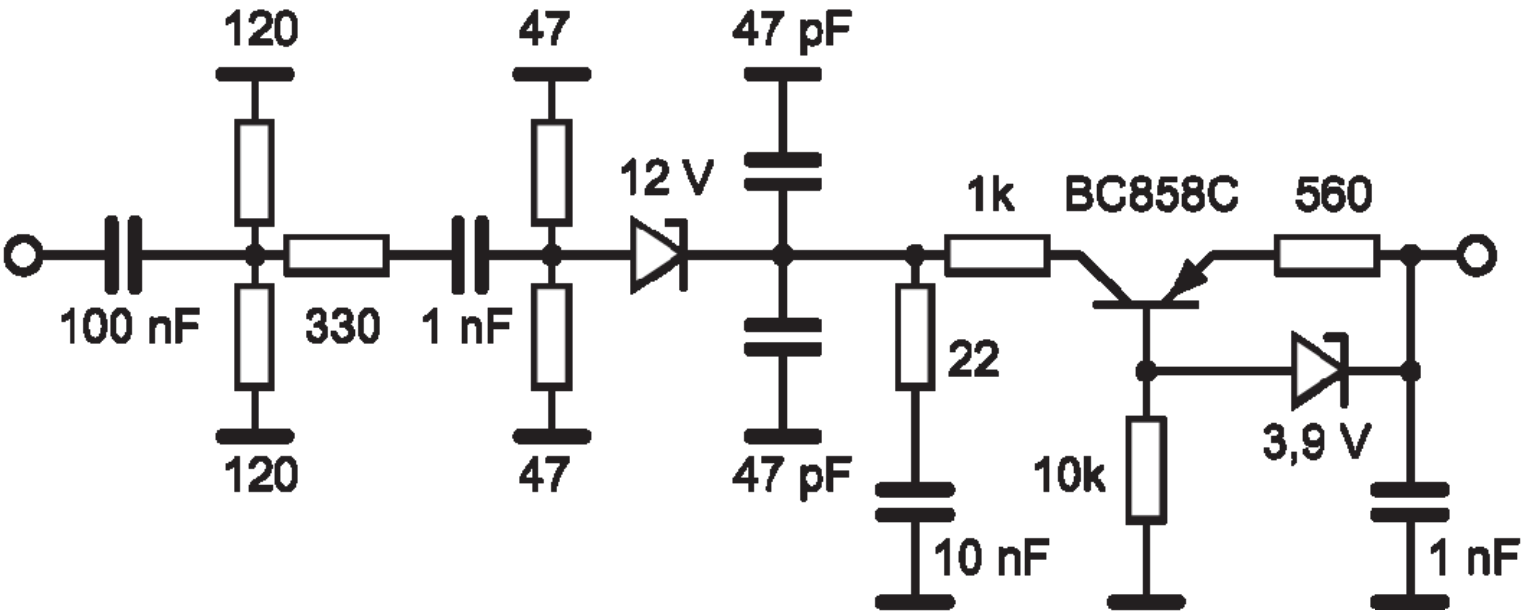

- BZV55-12 @ 6 mA into 22 Ohm load
- spectrum equalization by high pass 2 x 47 pF / 22 Ohm
- attenuator pad and DC blocking capacitor
- temperature compensated current source

Gain error

- Measurement error if gain changes between ON and OFF state; measured noise figure:

$$F = \frac{ENR}{Y \cdot \frac{G_{OFF}}{G_{ON}} - 1}$$

- To minimize gain error the reflection coefficient of the noise source should not change between ON and OFF
- $\Delta\Gamma = \Gamma_{ON} - \Gamma_{OFF}$ must be minimized

HP346A 5 dB ENR 18GHz

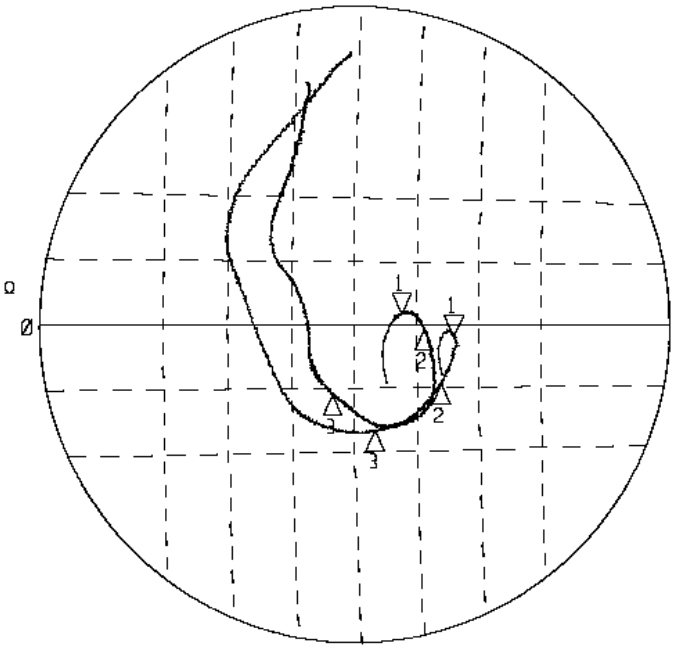

$|\Delta\Gamma|$

144 MHz	0,0045
432 MHz	0,0045
1296 MHz	0,0044

1:Mkr (MHz)	Ohm	Ohm	2:Mkr (MHz)	Ohm	Ohm
1> 144.000	50.37	92.96m	1> 144.000	50.79	-86.32m
2: 432.000	50.56	-37.11m	2: 432.000	50.69	-467.8m
3: 1296.000	50.16	-832.0m	3: 1296.000	49.83	-548.3m

Zener diode 15 dB ENR 2,5 GHz

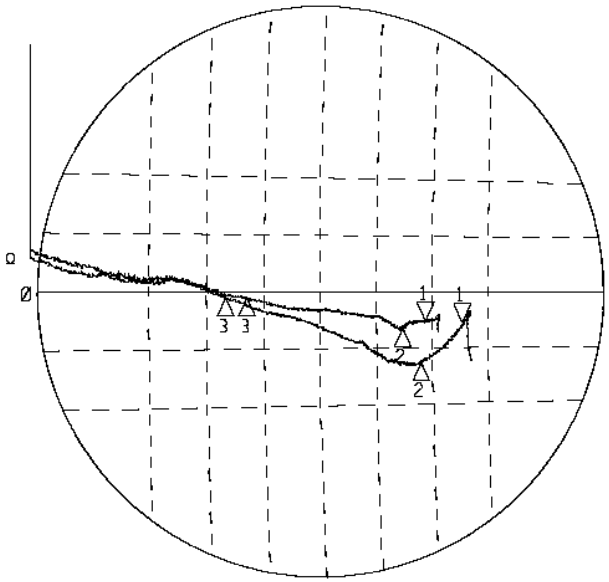

1:Mkr (MHz)	Ohm	Ohm	2:Mkr (MHz)	Ohm	Ohm
1> 144.000	50.93	-251.2m	1> 144.000	51.27	-272.9m
2: 432.000	50.74	-317.6m	2: 432.000	50.89	-619.2m
3: 1296.000	49.36	-51.11m	3: 1296.000	49.17	-47.05m

$|\Delta\Gamma|$

144 MHz	0,0033
432 MHz	0,0033
1296 MHz	0,0019

- 10 dB higher ENR
- less gain errror

than HP346A

Conclusion

- Noise figure meter functionality demonstrated based on a RTL2832U/E4000 DVB-T USB stick plus external hardware (total cost < £ 100)
- Compatible to professional noise figure test sets
- Low cost noise source useable up to 2.5 GHz